Mod./Type:	_70/... FT...ES... _90/... FT...ES...	cod./num.	2532151.00
		data/date:	06/02/2015

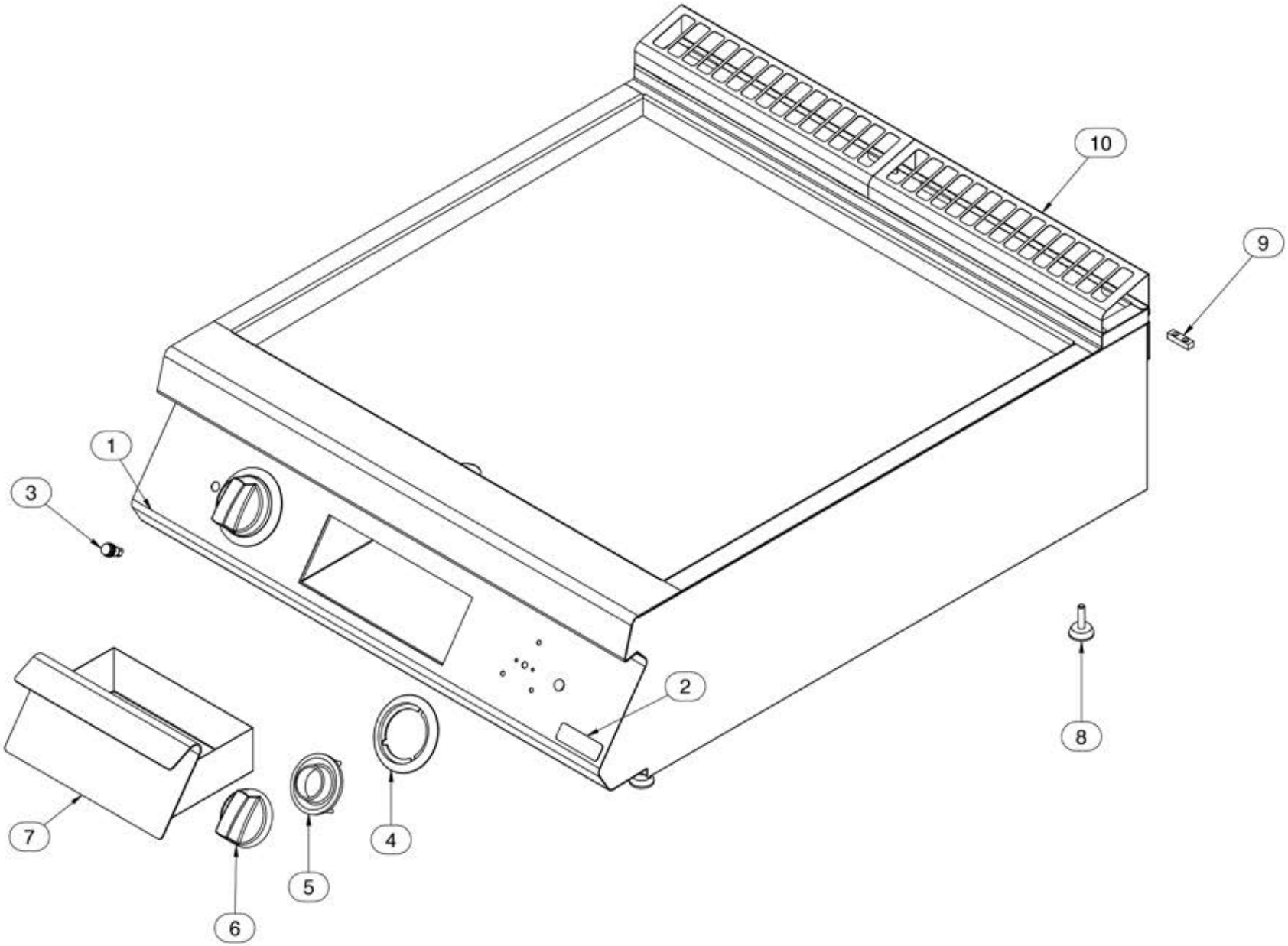

Mod.:	_70/... FT...ES... _90/... FT...ES...			cod. / num. 2532152.00 data / date 26/08/2014 rif. / ref. 2532151.00		PK70/40 FT...ES...	PK70/80 FT...ES...	PK70/120 FT...ES...	PK90/40 FT...ES...	PK90/80 FT...ES...	PK90/120 FT...ES...	NOTE
POS.	DESCRIZIONE	DESCRIPTION	DENOMINATION	BENENNUNG	COD.	Q.ty						
1	CRUSCOTTO	CONTROL PANEL	BANDEAU	BEDIENBLENDE	9111594.00	1			1			
					9111595.00		1			1		
2	MARCHIO	BRAND NAME	MARQUE	MARKENZEICHEN	682.008.00	1	1	1	1	1	1	
3	LAMPADA SPIA ARANCIO	ORANGE INDICATOR LIGHT	LAMPE TEMOIN ORANGE	ORANGE KONTROLLAMPE	963.013.00	1	2	3	1	2	3	
4	SERIGRAFIA	SCREEN PRINT	SÉRIGRAPHIE	SIEBDRUCK	910.229.00	1	2	3	1	2	3	
5	LABIRINTO	LABYRINTH	LABYRINTHE	LABYRINTH	256.218.00	1	2	3	1	2	3	
6	MANOPOLA	KNOB	BOUTON	DREHKNOPF	951.071.00	1	2	3	1	2	3	
7	CASSETTO	DRAWER	TIROIR	SCHUBLADE	6111248.00	1			1			
					6111249.00		1	2		1	2	
8	PIEDINO	FOOT	PIED	STELLFUSS	951.050.00	4	4	4	4	4	4	SOLO VERSIONE (-T) ONLY (-T) VERSION
9	PIASTRINA GIUNZIONE	FIXING PLATE	PLAQUETTE FIXAGE	BEFESTIGUNGSPLATTE	941.130.00	1	1	1	1	1	1	
10	GRIGLIA CAMINO	FLUE GRIDDLE	GRILLE POUR CHEMINÉE	KAMINROST	9211777.00	1	2	3	1	2	3	
11												
12												
13												
14												
15												
16												
17												
18												
19												
20												
21												
22												
23												
24												
25												
26												
27												
28												
29												
30												
31												
32												
33												
34												
35												
36												

Mod./Type: **_70/... FT...ES... - _90/... FT...ES...**

SIMPLE

cod./num. 2531826.00

data/date: 27/08/2014

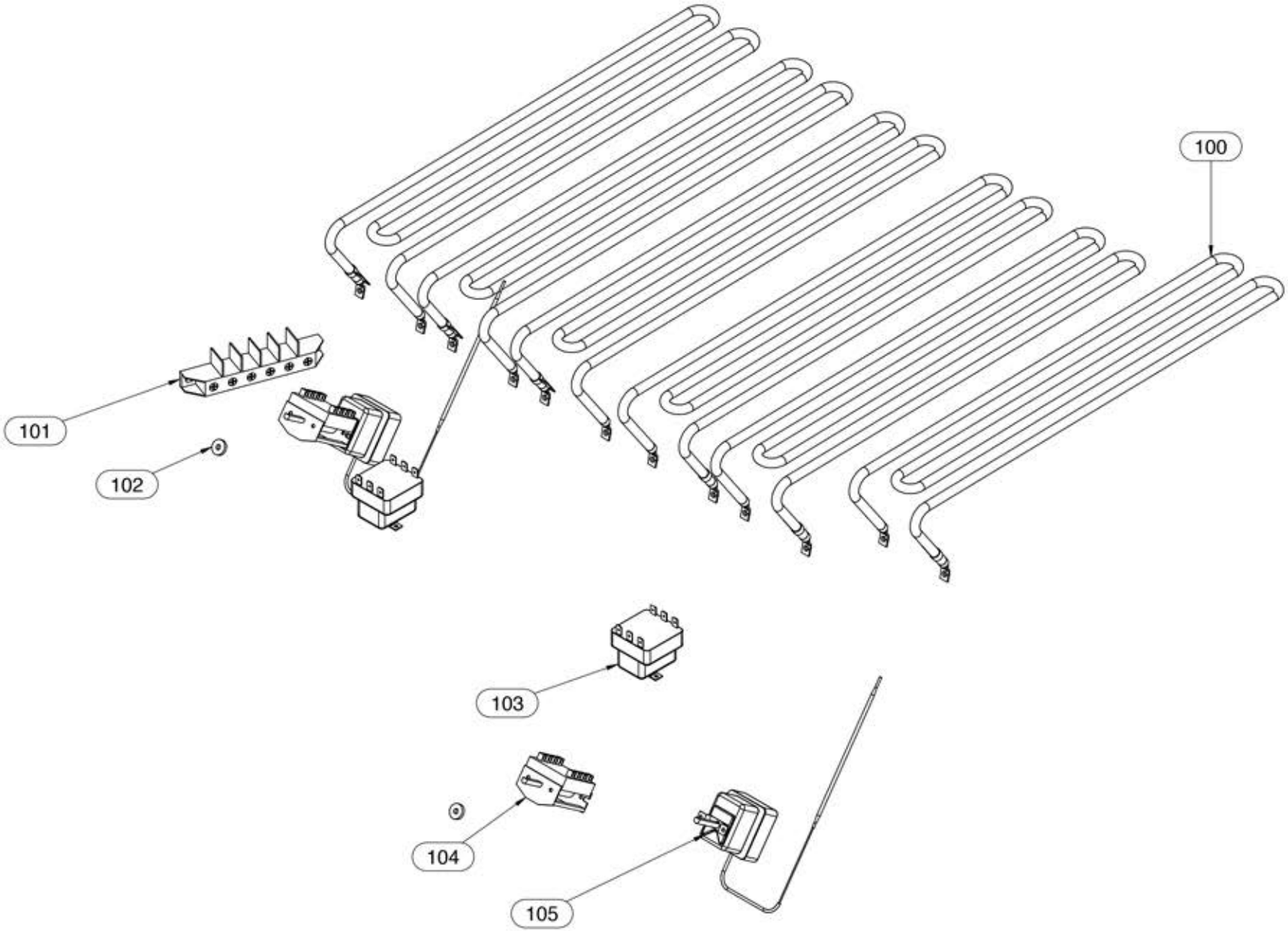

Mod.:	_70/... FT...ES... - _90/... FT...ES... SIMPLE			cod. / num. 2531827.00 data / date 27/08/2014 rif. / ref. 2531826.00		RICAMBI CONSIGLIATI - RECOMMENDED SPARE PARTS - PIECES DETACHEES RECOMMANDEES - EMPFOHLENEN ERSATZTEILE	_70/40 FT...ES...	_70/80 FT...ES...	_70/120 FT...ES...	_90/40 FT...ES...	_90/80 FT...ES...	_90/120 FT...ES...	NOTE
POS.	DESCRIZIONE	DESCRIPTION	DENOMINATION	BENENNUNG	COD.		Q.ty						
100	RESISTENZA	HEATING ELEMENT	RESISTANCE	HEINZELEMENT	665.095.12	*	3	6	9				
					965.059.12	*				3	6	9	
101	MORSETTIERA	TERMINAL BOARD	BORNES	KLEMMENBRETT	M566050500		1	1	1	1	1	1	
102	GUARNIZIONE	WASHER	GUARNITURE	DICHTUNGSRING	953.020.00		1	2	3	1	2	3	
103	TERMOSTATO SICUREZZA	SAFETY THERMOSTAT	THERMOSTAT DE SECURITE	TEMPERATURBEGRENZER	661.115.00	*	1	2	3	1	2	3	
104	COMMUTATORE	CHANGE-OVER SWITCH	COMMUTATEUR	UMSCHALTER	661.000.00	*	1	2	3	1	2	3	
105	TERMOSTATO	THERMOSTAT	THERMOSTAT	THERMOSTAT	661.116.00	*	1	2	3	1	2	3	
106													
107													
108													
109													
110													
111													
112													
113													
114													
115													
116													
117													
118													
119													
120													
121													
122													
123													
124													
125													
126													
127													
128													
129													
130													
131													
132													
133													
134													
135													
136													
137													